TM-1709
Price: $2.00

SYSTEM 4

TESTER MANUAL

February 1977

COMPUTER DIVISION

WARNER & SWASEY

7413 Washington Avenue South
Minneapolis, MN 55435
(612) 941-4454

NOTICE
The Warner & Swasey Company supplies all data necessary for the proper instruction, text, operation and maintenance of its products. Warner & Swasey retains all proprietary rights in and to the information so disclosed and such shall not be reproduced, copied, or used in whole or in part for purposes other than those for which it is furnished.

©1977 The Warner & Swasey Co.

RECORD OF REVISIONS

DATE	PAGE NO.	ACTION	DATE	PAGE NO.	ACTION
2/77	All	Original Issue			

TABLE OF CONTENTS

PAGE

SECTION 1. GENERAL DESCRIPTION

1.1 INTRODUCTION 1-1
1.2 PHYSICAL CONFIGURATION 1-1
1.2.1 CONSOLE 1-1
1.2.2 MOUNTING RACK 1-2
1.2.3 MODULES 1-2
1.3 SOFTWARE DESCRIPTION 1-2

SECTION 2. INSTALLATION

2.1 GENERAL 2-1
2.2 PROCEDURE 2-1

SECTION 3. TEST PROCEDURES

3.1 GENERAL 3-1
3.2 BASIC TESTER CHECK 3-1
3.3 REGULATOR (9007-9100) TEST PROCEDURE 3-2
3.4 POWER SUPPLY (9007-9300) TEST PROCEDURE 3-2
3.5 CPU (9007-1100) TEST PROCEDURE 3-3
3.6 CPU (9007-1110/9007-1120) TEST PROCEDURE 3-4
3.7 RAM (9007-1202) TEST PROCEDURE 3-4
3.8 RAM (9007-1285) TEST PROCEDURE 3-4
3.9 16 X 16 I/O (9007-2500 and 9007-2600) TEST PROCEDURE 3-5
3.10 PROM (9007-1302 and 9007-1322) TEST PROCEDURE 3-6
3.11 16 ISO INPUT (9007-2102) TEST PROCEDURE 3-6
3.12 THUMBWHEEL SWITCH (9008-1050) TEST PROCEDURE 3-7
3.13 MULTIPLEXER (9007-2700) TEST PROCEDURE 3-8
3.14 AC OUT (9007-3200) TEST PROCEDURE 3-9
3.15 D/A CONVERTER (9007-7310) TEST PROCEDURE 3-9
3.16 INTERRUPT (9007-1111) TEST PROCEDURE 3-10
3.17 MULTIPURPOSE (9007-2750) TEST PROCEDURE 3-11
3.18 MULTIPLEX DIODE (9007-2800) TEST PROCEDURE 3-12
3.19 32 IN (9007-2100) TEST PROCEDURE 3-12
3.20 AC IN (9007-3100) TEST PROCEDURE 3-13
3.21 SERIAL COMMUNICATION (9007-8100) TEST PROCEDURE 3-13
3.22 CRC (9007-8301) TEST PROCEDURE 3-14
3.23 PARALLEL COMMUNICATION (9007-8200) TEST PROCEDURE 3-15

SECTION 4. MAINTENANCE

4.1 GENERAL 4-1
4.2 TROUBLESHOOTING 4-1
4.3 CORRECTIVE MAINTENANCE 4-2

SECTION 5. ILLUSTRATED PARTS BREAKDOWN 5-1

SECTION 1

GENERAL DESCRIPTION

1.1 INTRODUCTION

The System 4 Tester is designed to provide a dynamic check of various System 4 Microcomputer modules to ensure proper operation.

This manual includes information on initialization, test procedures, and maintenance.

1.2 PHYSICAL CONFIGURATION

The tester is a self-contained unit that measures 14¼ inches wide, 23½ inches long, and 7¼ inches deep. The unit weighs approximately 32 pounds with the basic modules installed.

The tester consists of these main components: Console, Mounting Rack, and Modules.

1.2.1 CONSOLE

The console is illustrated in figure 1-1, followed by an explanation of the switches and indicators.

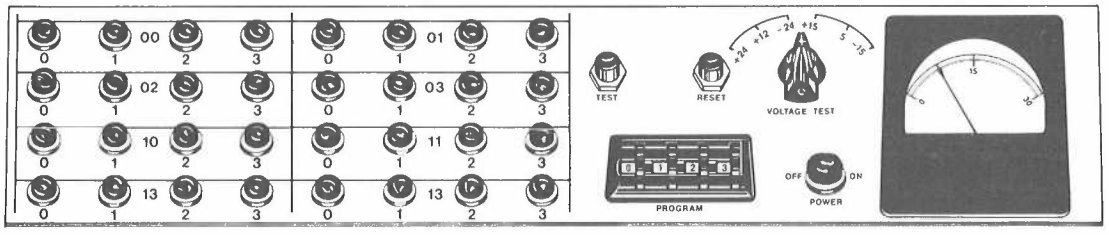

Figure 1-1. Console

POWER	Push-Button Switch/Indicator	When activated, turns power on and illuminates red.
TEST	Push-Button Switch	When activated, causes a predetermined test program to be executed.
RESET	Push-Button Switch	When activated, brings the program out of the test sequence.
THW 1, THW 2, THW 3, THW 4	Rotary Thumbwheel Switches	Used to select the internal program to perform the test.
32 Indicators		Display the condition of the module under test.
SELECTOR SWITCH AND VOLTMETER		Provided to monitor the power supply and regulator voltages.

1.2.2 MOUNTING RACK

The mounting rack contains 27 module positions (see figure 1-2). Positions 1 through 8 are used for the basic tester, and positions 9 through 27 are used for expansion.

The indicators on the right side of the rack are only used when an AC Out module is being tested. These indicators display the outputs from that module.

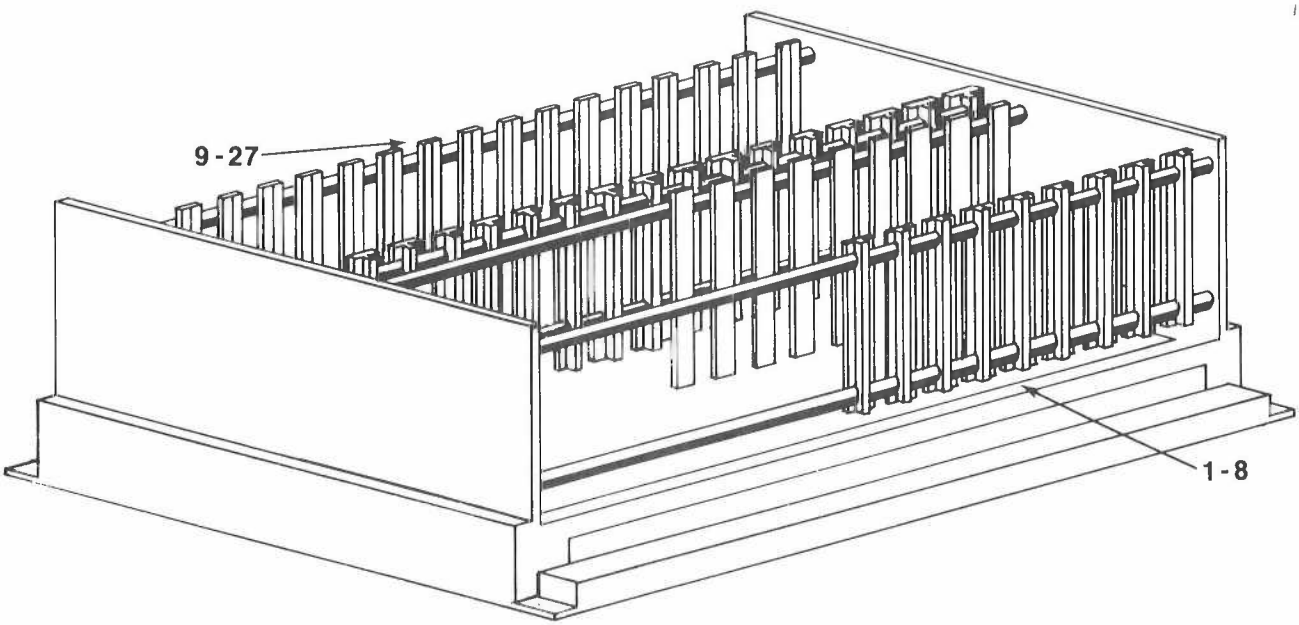

Figure 1-2. Mounting Rack

1.2.3 MODULES

The basic tester includes a tested Regulator module, Central Processor Unit (CPU) module, Programmable Read Only Memory (PROM) module, two 16 x 16 Input/Output modules, and a 32 Input module. External to the tester is a power supply which is connected to the rack by a three foot cable.

The tester can be expanded to test other microcomputer modules by adding complementary modules in rack positions 9 through 27 as shown in figure 1-2.

1.3 SOFTWARE DESCRIPTION

The PROM chips on the PROM module are programmed with diagnostic programs and each program can be accessed by referring to the starting address (see figure 1-3).

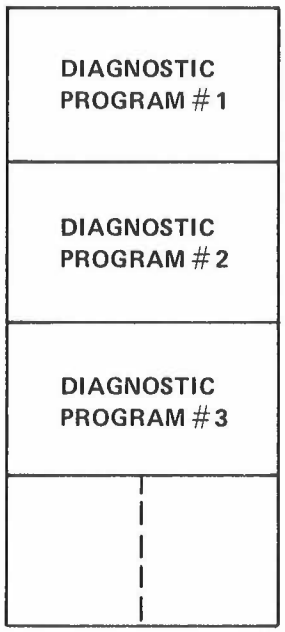

Figure 1-3. PROM Chip

The number of programs per chip depends on the size of the program. A PROM chip has 256 locations. If the diagnostic programs take up more than 256 locations, then additional PROM chips are required.

The desired program can be accessed by selecting the appropriate number on the thumbwheel switches.

SECTION 2

INSTALLATION

2.1 GENERAL

This section describes the procedure for installing the System 4 Tester. It is recommended that the installation be performed in the sequence listed to insure proper operation of the tester.

2.2 PROCEDURE

To install the tester, proceed as follows:

1. Connect the power supply (part number 9007-9300) to the tester mounting rack with the power cable provided. The cable has a fanning strip on each end which connects to the power supply terminals and the first eight terminals on the computer rack.

2. Install the following modules in the mounting rack in the slots indicated:

SLOT	MODULE	NUMBER
1	Regulator	9007-9100
2	RAM	9007-1202
3	CPU	9007-1110
4	PROM	9007-1302
6	16 I/O HTL	9007-2600
7	16 I/O TTL	9007-2500
8	32 In TTL	9007-2100

3. Connect the bus cable to the modules listed in step 2.

4. Plug the power cable provided into the power outlet on the end of the rack.

5. Turn on the power supply (switch in the up position).

6. Plug the power cord into a 120 VAC single phase outlet.

7. Press and release POWER on the tester console. Observe that the fan starts up and the lights on the console start flashing. The system is now ready for operation.

SECTION 3

TEST PROCEDURES

3.1 GENERAL

The System 4 Tester is designed to facilitate the diagnosing of module failures in the System 4 Microcomputers.

Prior to running any module test, insure that the basic tester operates properly. Allow the supply voltage to discharge completely before installing or removing any module and never unplug the top cable while the power is on.

3.2 BASIC TESTER CHECK

To check the basic tester, follow the procedure below:

1. Connect power supply (9007-9300) to the rack and turn power supply on (switch in the up position). Attach line cord to the power supply receptacle at the end of the chassis.

2. Install the following modules and plug in the top cable:

MODULE	NUMBER	SLOT
Regulator	9007-9100	1
RAM	9007-1202	2
CPU	9007-1110	3
PROM	9007-1301	4
16X16 I/O	9007-2600	6
16X16 I/O	9007-2500	7
32 In	9007-2100	8

3. Turn the tester on by pressing the red POWER switch.

4. Observe that all indicators flash on and off with a 50% duty cycle, and the voltages are in the selected range.

NOTE

If step 4 does not occur, it is possible that one or more modules are installed incorrectly. Turn power off and check each module for proper installation.

5. Proceed to check the tester RAM specified in paragraph 3.7.

6. The successful completion of steps 1 through 5 of this test indicate that the tester is working properly. Proceed to test the various modules as specified in the following paragraphs.

3.3 REGULATOR (9007-9100) TEST PROCEDURE

To test the Regulator module, follow the procedure below:

1. Remove the Regulator module from slot 1 of the tester.

2. Install the Regulator module to be tested in slot 1. Do not connect the top cable.

3. Apply power to the tester.

4. Using the selector switch and voltmeter, check all D.C. voltages as shown below:

SELECTOR SWITCH POSITION	VOLTMETER READING
+24	24-30V
+12	12-15V
+24	24-30V
+15	15 ± 1V
+ 5	5 ± .5V
-15	15 ± 1V

5. If any of the voltage readings are incorrect, the Regulator module is defective. Replace Regulator module and repeat steps 2 through 4. If the voltages are correct, proceed to step 6.

6. Remove power from the tester and connect the top cable on the Regulator module.

7. Re-apply power to the tester and observe that all voltages are in the range specified in step 4 and all indicators flash.

8. If the voltages are not within the specified ranges or if the indicators do not flash, the Regulator module is defective. Replace the Regulator module and repeat steps 2 through 7.

3.4 POWER SUPPLY (9007-9300) TEST PROCEDURE

To test the power supply, follow the procedure below:

1. Remove the power cable from the tester power supply and connect it to the power supply to be tested.

2. Remove the Regulator module from slot 1 of the tester.

3. Apply power to the tester.

4. Using the selector switch and voltmeter, check D.C. voltages as shown below:

SELECTOR SWITCH POSITION	VOLTMETER READING
+24	24-30V
+12	12-15V
-24	24-30V

5. If any of the readings are incorrect, the power supply is defective. Replace power supply and repeat steps 1 through 4. If the readings are within tolerance, proceed to step 6.

6. Remove power and install the Regulator module in slot 1. Turn power back on and check all D.C. voltages as shown below:

SELECTOR SWITCH POSITION	VOLTMETER READING
+24	24-30V
+12	12-15V
-24	24-30V
+15	15 ± 1V
+ 5	5 ± .5V
-15	15 ± 1V

7. If the voltage readings are not within tolerance, the power supply is defective. Replace power supply and repeat steps 1 through 7. If the readings are within tolerance, proceed to step 8.

8. Remove power and connect the top cable to the regulator. Turn power back on and perform the basic tester check in paragraph 3.2.

3.5 CPU (9007-1100) TEST PROCEDURE

To test the CPU module (9007-1100), follow the procedure below:

1. Ascertain that the tester is working properly, then remove the power.

2. Remove the tester CPU module from slot 3 and install CPU module to be tested in slot 11. Connect the top cable.

3. Apply power to the tester and observe that the indicators flash.

4. Run the RAM test (steps 4 and 5 of paragraph 3.7). If the CPU module functions properly during the RAM test, it may be assumed to be good. If it does not function properly, replace the CPU module and repeat this test.

5. Return the tester CPU module to slot 3 upon completion of this test.

3.6 CPU (9007-1110 and 9007-1120) TEST PROCEDURE

To test the CPU module (9007-1110 and 9007-1120), follow the procedure below:

1. Ascertain that the tester is working properly, then remove the power.
2. Remove the tester CPU module from slot 3 and replace it with the CPU module to be tested. Connect the top cable.
3. Apply power and observe that the indicators flash.
4. Run the RAM test (steps 4 and 5 of paragraph 3.7), 16 X 16 I/O test (steps 5 and 6 of paragraph 3.9) and the Interrupt test (steps 1 through 11 of paragraph 3.17). If the CPU module functions properly during these tests, it may be assumed to be good. If the module does not function properly, replace it and repeat the test.

3.7 RAM (9007-1202) TEST PROCEDURE

To test the RAM module (9007-1202) follow the procedure below:

1. Ascertain that the tester is working properly, then remove the power.
2. Install the RAM module to be tested in slot 2.
3. Apply power to the tester and observe that the indicators flash.
4. Set the thumbwheels to 0002.
5. Press and release TEST. Observe that the following occurs in sequence:
   a. All indicators extinguish.
   b. Indicators 00-0 through 00-3 illuminate.
   c. Indicators 01-0 through 01-3 illuminate.
   d. Indicators 02-0 through 02-3 illuminate.
   e. Indicators 03-0 through 03-3 illuminate.
   f. Indicators 10-0 through 10-3 illuminate.
   g. Indicators 11-0 through 11-3 illuminate.
   h. Indicators 12-0 through 12-3 illuminate.
   i. Indicators 13-0 through 13-3 illuminate.

   This sequence continues until RESET is activated.
6. If the indicators do not illuminate in the proper sequence, the RAM module is defective. Replace the RAM module and repeat steps 1 through 5.

3.8 RAM (9007-1285) TEST PROCEDURE

To test the RAM module (9007-1285), follow the procedure below:

1. Ascertain that the tester is working properly, then remove the power.

2. Remove the RAM module from slot 2 and install RAM module to be tested in slot 18. Remove I/O module from slot 7 and install it in slot 17. Connect the top cable to the modules in slots 17 and 18.

3. Apply power and observe that the indicators do not flash.

4. Set thumbwheel switch 4 to 8.

5. Press and release TEST. Observe the following:

   a. The top row of indicators (00-0 through 02-3) display very rapidly the addresses from 00 to FF.

   b. Indicators 02-0 through 02-3 display the data written to and read from each address location, and increment from 0 to F and repeat.

   c. Indicators 03-0 through 03-3 display the DCL command in use and increment from 0 to F and repeat.

   This sequence continues until RESET is activated.

6. If the program does not halt through one cycle, the module is good. If the module is defective, the program halts when an error is detected, delays, and starts again. Replace the defective module and repeat this test.

7. Return the tester RAM module to slot 2 and the tester I/O module to slot 7 upon completion of this test.

3.9 16 X 16 I/O (9007-2500 and 9007-2600) TEST PROCEDURE

To test the 16 X 16 I/O module, (9007-2500 and 9007-2600), follow the procedure below:

1. Ascertain that the tester is working properly, then remove the power.

2. Install the 16 X 16 I/O module to be tested in slot 24 and connect top cable.

3. Apply power to the tester and observe that the indicators flash.

4. Insure that the tester has an I/O module installed in slot 6 with address 44-74.

5. Set the thumbwheel 1 to the starting address, thumbwheel 2 to bank select, and thumbwheel 4 to 0.

6. Press and release TEST. Observe that at first all indicators extinguish, then illuminate and extinguish in the following sequence:

   00-0
   00-1
   00-2
   00-3
   01-0
   01-1
   01-2

01-3
02-0
02-1
02-2
02-3
03-0
03-1
03-2
03-3

This sequence continues until RESET is activated.

7. If any indicator fails to illuminate or extinguish in the proper sequence, the 16 X 16 I/O module is defective. Replace the 16 X 16 I/O module and repeat steps 1 through 6.

NOTE

To test the I/O module in slot 6 of the tester, the I/O module in slot 7 must be exchanged with it and the address chips must also be exchanged. (These boards are not interchangeable for the normal operation of the system.) Return the modules to the original slots after the test is completed. All other modules not used in the basic tester system must be removed for this test.

3.10 PROM (9007-1302 and 9007-1322) TEST PROCEDURE

To test the PROM module (9007-1302 and 9007-1322), follow the procedure below:

1. Ascertain that the tester is working properly, then remove the power.
2. Remove the tester PROM module from slot 4.
3. Remove the PROM chips from the module to be tested.
4. Remove the PROM chip from socket 7 of the tester PROM module and insert it in socket 0 of the module to be tested.
5. Install the PROM module to be tested in slot 4 of the tester and connect the top cable.
6. Apply power to the tester and observe that the top two rows of indicators (00-0 through 03-3) count from 0 to F simultaneously and repeat until power is turned off.
7. Repeat steps 5 and 6 with test chip in each socket of the module being tested.
8. If step 6 does not occur for each socket in the module being tested, the module is defective. Replace the PROM module and repeat this test.

3.11 16 ISO INPUT (9007-2102) TEST PROCEDURE

To test the 16 ISO Input module (9007-2102), follow the procedure below:

1. Ascertain that the tester is working properly, then remove the power.
2. Install the 16 ISO Input module to be tested in slot 10 and connect the top cable.

3. Apply power and observe that the indicators flash.

4. Set thumbwheel 1 to the address of the module, thumbwheel 2 to bank select, and thumbwheel 4 to 1 to select the test.

5. Press and release TEST. Observe that the following occurs in sequence:

   a. All indicators extinguish.

   b. Indicators 00-0 through 00-3 illuminate, then extinguish.

   c. Indicators 01-0 through 01-3 illuminate, then extinguish.

   d. Indicators 02-0 through 02-3 illuminate, then extinguish.

   e. Indicators 03-0 through 03-3 illuminate, then extinguish.

   This sequence continues until RESET is activated.

6. If any of the indicators do not illuminate and extinguish properly, the module is defective. Replace the module and repeat the test.

3.12 THUMBWHEEL SWITCH (9008-1050) TEST PROCEDURE

To test the Thumbwheel Switch module (9008-1050), follow the procedure below:

1. Ascertain that the tester is working properly, then remove the power.

2. Install the Thumbwheel Switch module that is to be tested in slot 19.

3. Apply power and observe that the indicators flash.

4. Set thumbwheel 4 to 3.

5. Press and release TEST. Observe that the indicators stop flashing and the numbers dialed on the Thumbwheel Switch module are displayed on the indicators in BCD in the following order:

INDICATOR	THUMBWHEEL
00 (0-3)	Black (LSD)
01 (0-3)	Yellow (LSD)
02 (0-3)	Blue (LSD)
03 (0-3)	Red (LSD)
10 (0-3)	Black (MSD)
11 (0-3)	Yellow (MSD)
12 (0-3)	Blue (MSD)
13 (0-3)	Red (MSD)

6. If any thumbwheel does not display the correct BCD numbers on the indicators, the Thumbwheel Switch module is defective. Replace the module and repeat the test.

3.13 MULTIPLEXER (9007-2700) TEST PROCEDURE

To test the Multiplexer module (9007-2700), follow the procedure below:

1. Ascertain that the tester is working properly, then remove the power.

2. Install the Multiplexer module that is to be tested in slot 9 and connect the top cable.

3. Apply power and observe that the indicators flash.

4. Set thumbwheel 1 to the multiplexer address, thumbwheel 2 to bank select, and thumbwheel 4 to 7.

5. Press and release TEST. Observe the following:

   a. All indicators extinguish.

   b. The 12 inputs are checked first. The following indicators illuminate, then extinguish in the sequence listed:

      00-0, 00-1, 00-2, 00-3

      01-0, 01-1, 01-2, 01-3

      02-0, 02-1, 02-2, 02-3

   c. The 32 outputs are checked next. The following indicators illuminate, then extinguish in the sequence listed:

      00-0, 00-1, 00-2, 00-3

      01-0, 01-1, 01-2, 01-3

      02-0, 02-1, 02-2, 02-3

      03-0, 03-1, 03-2, 03-3

      10-0, 10-1, 10-2, 10-3

      11-0, 11-1, 11-2, 11-3

      12-0, 12-1, 12-2, 12-3

      13-0, 13-1, 13-2, 13-3

   This sequence continues until RESET is activated.

6. If the starting address of the inputs and outputs is not the same, the inputs and outputs will have to be checked separately. This is accomplished by setting the address thumbwheel for the input starting address and checking only the inputs, and then setting the address thumbwheel for the output starting address and checking only the outputs.

7. If any of the indicators do not illuminate and extinguish properly, the module is defective. Replace the module and repeat this test.

3.14 AC OUT (9007-3200) TEST PROCEDURE

To test the AC Out module (9007-3200), follow the procedure below:

1. Ascertain that the tester is working properly, then remove the power.
2. Install the AC Out module to be tested in slot 16.
3. Apply power and observe that the indicators flash.
4. Set thumbwheel 4 to 5, thumbwheel 1 to the module address, and thumbwheel 2 to bank select.
5. Press and release TEST. Observe the following:

   a. All indicators are extinguished.

   b. Output indicators 1 through 8 illuminate, then extinguish in sequence.

   This sequence continues until RESET is activated.

6. If any of the indicators do not illuminate and extinguish in the proper sequence, the module is defective. Replace the module and repeat this test.

3.15 D/A CONVERTER (9007-7310) TEST PROCEDURE

To test the D/A Converter module (9007-7310), follow the procedure below:

1. Ascertain that the tester is working properly, then remove the power.
2. Install an A/D Converter (9007-6300) in slot 14 and the D/A Converter module to be tested in slot 13. Connect the top cable.
3. Apply power and observe that the indicators flash.
4. Set thumbwheel 4 to 9, and thumbwheels 1, 2, and 3 to 0.
5. Press and release TEST and observe all indicators extinguish.
6. Input to the module is accomplished by the settings of thumbwheels 1, 2, and 3 and the output is displayed in BCD by indicators 00 (0-3) 01 (0-3) and 02 (0-3). Set the thumbwheels as shown below and observe that the indicators illuminate accordingly. Press and release TEST after each setting.

THUMBWHEEL	SETTING	INDICATORS
1	Ones (0-9)	02 (0-3)
2	Tenths (0.0-0.9)	00 (0-3)
3	Hundredths (0.00-0.09)	01 (0-3)

7. Connect an external meter to terminals 22 (+) and 23 (–) to monitor the module output. The polarity of the output may be changed by setting thumbwheel 4 to A or 8. The indicators display 0 for any negative output.

8. Set thumbwheels 1, 2, and 3 to 0. Press and release TEST and observe that indicator 03-3 illuminates. Indicators 03 (0-3) illuminate according to the settings of thumbwheel 1 as shown below:

THUMBWHEEL 1 SETTING	INDICATOR ILLUMINATED
0	03-3
1	03-0, 03-3
2	03-1, 03-3
3	03-0, 03-1, 03-3
4	03-2, 03-3
5	03-0, 03-2, 03-3
6	03-1, 03-2, 03-3
7	03-0, 03-1, 03-2, 03-3

This test step checks the digital outputs in the SMITS system. By activating TEST again, the program will be returned to the module output test in step 6.

9. If the module fails to function properly during any portion of the test, it is defective. Replace the module and repeat the entire test.

3.16 INTERRUPT (9007-1111) TEST PROCEDURE

To test the Interrupt module (9007-1111), follow the procedure below:

1. Ascertain that the tester is working properly, then remove the power.

2. Install the Interrupt module to be tested in slot 12 and connect the bus cable.

3. Apply power and observe that the indicators flash.

4. Set thumbwheel 4 to A (SMITS System).

5. Press and release TEST. Observe the following:

   a. Indicators 01-0 through 01-3 illuminate indicating real time interrupt E (hexadecimal).

   b. Indicators 00-0 through 00-3 illuminate indicating power fail interrupt.

6. Connect a jumper from terminal 9 to terminals 15, 16, and 17 and observe that interrupt levels 5, 6, and 7 are displayed on indicators 00-0 through 00-3.

7. If the real time interrupt E or interrupt levels 5, 6, and 7 are not displayed on indicators 01 (0-3) and 00 (0-3) respectively, the module is defective.

8. Set thumbwheel 4 to B (ESS System).

9. Press and release TEST. Observe that the real time interrupt E is displayed in hexadecimal on indicators 01 (0-3).

10. Thumbwheels 1, 2 and 3 may be used to enable or disable interrupt levels 0 through B. Thumbwheel setting FFF enables all interrupts 0 through B and 000 disables all interrupts 0 through B.

11. Connect a jumper from terminal 9 to terminals 10 through 21 and observe that interrupts 0 through B are displayed on indicators 00 (0-3) in hexadecimal as shown below. (X indicates indicator is illuminated.)

TERMINAL	INDICATOR 00				HEXADECIMAL DISPLAYED
	0	1	2	3	
10					0
11	X				1
12		X			2
13	X	X			3
14			X		4
15	X		X		5
16		X	X		6
17	X	X	X		7
18				X	8
19	X			X	9
20		X		X	A
21	X	X		X	B

12. If real time interrupt E or interrupts 0 through B are not displayed properly, the module is defective. Replace the module and repeat the test.

3.17 MULTIPURPOSE (9007-2750) TEST PROCEDURE

To test the Multipurpose module (9007-2750), follow the procedure below:

1. Ascertain that the tester is working properly, then remove the power.

2. Install the Multipurpose module that is to be tested in slot 21.

3. Apply power and observe that the indicators flash.

4. Set thumbwheel 4 to 4 and thumbwheels 1, 2 and 3 to 0.

5. Press and release TEST. Observe that all indicators extinguish.

6. Set thumbwheels 2, 3 and 4 as shown below and observe that the indicators illuminate accordingly.

THUMBWHEEL 2	THUMBWHEEL 3	THUMBWHEEL 4	INDICATORS ILLUMINATED
1	1	1	00-0, 00-2
2	2	2	00-0, 00-2
3	3	3	00-0, 00-2
4	4	4	00-0, 00-2
5	5	5	00-0, 00-2
6	6	6	00-0, 00-2
7	7	1	00-1, 00-3
8	8	2	00-1, 00-3
9	9	3	00-1, 00-3
A	A	4	00-1, 00-3
B	B	5	00-1, 00-3
C	C	6	00-1, 00-3

7. Check the output of the oscillator by connecting one scope probe to terminals 24 and 25, and the other probe to ground (terminal 9). The square wave and frequency will vary depending on the system setting.

8. If the indicators fail to illuminate and extinguish properly, the module is defective. Replace the module and repeat this test.

3.18 MULTIPLEX DIODE (9007-2800) TEST PROCEDURE

There is no operational test procedure for the Multiplex Diode module. To insure the module is not defective, visually inspect the module for any signs of damage. With the use of an ohmmeter, check the diodes and the continuity from the edge connectors to the diodes.

If any abnormal condition is found during the visual inspection or continuity checks, replace the module.

3.19 32 IN (9007-2100) TEST PROCEDURE

To test the 32 In module (9007-2100), follow the procedure below:

1. Ascertain that the tester is working properly, then remove the power.

2. Install the 32 In module to be tested in slot 8.

3. With the use of a known good Multiplexer module, perform steps 3 through 6 of paragraph 3.13, Multiplexer Test Procedure. (The output portion of that test checks the 32 In module.)

4. If no problems occur during the running of the Multiplexer Test, the 32 In module is good. If the Multiplexer Test is not successfully completed, replace the 32 In module and repeat this test.

3.20 AC IN (9007-3100) TEST PROCEDURE

To test the AC In module (9007-3100), follow the procedure below:

1. Ascertain that the tester is working properly, then remove the power.

2. Install the AC In module to be tested in slot 15 and connect the top cable.

3. Apply power and observe that the indicators flash.

4. Set thumbwheel 1 to the address of the module, thumbwheel 2 to bank select, and thumbwheel 4 to F.

5. Press and release TEST. Observe that the indicators extinguish.

6. Check each input by connecting a jumper from terminal 34 to the input terminals 35 through 42. Observe that as each connection is made, a corresponding indicator illuminates as shown below:

TERMINAL CONNECTED TO 34	INDICATOR ILLUMINATED
35	00-0
36	00-1
37	00-2
38	00-3
39	01-0
40	01-1
41	01-2
42	01-3

7. If any of the indicators fail to illuminate or extinguish properly, the module is defective. Replace the module and repeat this test.

3.21 SERIAL COMMUNICATION (9007-8100) TEST PROCEDURE

To test the Serial Communication module (9007-8100), follow the procedure below:

1. Ascertain that the tester is working properly, then remove the power.

2. Install the Serial Communication module to be tested in slot 26 and the tester Serial Communication module in slot 27. Connect the top cable to both modules.

3. Apply power and observe that the indicators flash.

4. Set thumbwheel 4 to D.

5. Press and release TEST. Observe that following occurs in the sequence listed:

   a. All indicators extinguish.

   b. Indicators 00 (0-3) and 01 (0-3) count from 00 to FF very rapidly (approximately once every 2.5 seconds).

   This sequence continues until RESET is activated.

6. If a parity error is detected, the program halts and waits for TEST to be reactivated. Press and release TEST. If after three attempts the parity error remains, the module is considered to be defective.

7. If a transmission error occurs, the program halts and the data received is displayed on indicators 02 (0-3) and 03 (0-3). Press and release TEST. If after three attempts the transmission error remains, the module is considered defective.

3.22 CRC (9007-8301) TEST PROCEDURE

To test the CRC module (9007-8301), follow the procedure below:

1. Ascertain that the tester is working properly, then remove the power.

2. Install the CRC module to be tested in slot 23.

3. Apply power and observe that the indicators flash.

4. Set thumbwheel 4 to C, and thumbwheels 1 and 2 to F.

5. Press and release TEST. Observe that indicators 00 (0-3) and 01 (0-3) display in hexadecimal FB. Continue to press and release TEST and observe that the following sequence is displayed on indicators 00 (0-3) and 01 (0-3). (X indicates indicator is illuminated.)

INDICATOR 00				INDICATOR 01				HEXADECIMAL
0	1	2	3	0	1	2	3	NUMBER DISPLAYED
	X	X	X	X	X	X	X	EF
	X	X	X			X	X	EC
	X	X	X	X	X	X	X	EF
	X		X		X	X	X	AE
X				X	X	X	X	IF
	X	X	X	X	X		X	EB
X	X		X	X	X	X	X	BF
	X	X	X			X	X	EC
X		X	X	X	X	X	X	DF
	X		X		X		X	AA
	X	X	X	X	X	X	X	EF
X								10
	X	X	X	X	X		X	EB
X	X	X	X	X	X		X	FB

6. If the indicators fail to illuminate and extinguish properly, the module is defective. Replace the module and repeat this test.

3.23 PARALLEL COMMUNICATION (9007-8200) TEST PROCEDURE

To test the Parallel Communication module (9007-8200), follow the procedure below:

1. Ascertain that the tester is working properly, then remove the power.

2. Install the Parallel Communication module to be tested in slot 22 and connect the top cable.

3. Apply power and observe that the indicators flash.

4. Set thumbwheel 1 to the module address, thumbwheel 2 to bank select, and thumbwheel 4 to E.

5. Press and release TEST. Observe that following sequence occurs:

   a. All indicators extinguish.

   b. Indicators 00-0 through 00-3 illuminate, then extinguish.

c. Indicators 01-0 through 01-3 illuminate, then extinguish.

d. Indicators 02-0 through 02-3 illuminate, then extinguish.

This sequence continues until RESET is activated.

6. If any of the indicators fail to illuminate and extinguish in the proper sequence, the module is defective. Replace the module and repeat this test.

SECTION 4

MAINTENANCE

4.1 GENERAL

The Sytem 4 Tester requires a minimum of maintenance and service when properly used. To insure a long operating life and high realiability, all maintenance procedures should be performed by experienced personnel.

4.2 TROUBLESHOOTING

Listed in table 4-1 are the various malfunctions that may occur, the probable causes, and the recommended solutions.

Table 4-1. Troubleshooting Procedure

PROBLEM	PROBABLE CAUSE	SOLUTION
1. Power indicator does not illuminate and fan does not run.	1. Power cord not plugged in.	1. Plug power cord into receptacle.
	2. Power switch in off position.	2. Turn power switch on.
2. Panel indicators do not flash on start up.	1. Power supply switch off.	1. Turn power supply switch on.
	2. Blown power supply fuse.	2. Replace power supply fuse.
	3. Regulator voltages out of tolerance.	3. Adjust the voltages on the Regulator module.
	4. Top cable removed from I/O and 32 In module.	4. Connect top cable to I/O and 32 In modules.
	5. Defective CPU module.	5. Replace CPU module.
	6. Defective RAM module.	6. Replace RAM module.
	7. Defective PROM module.	7. Replace PROM module.
	8. Defective bus cable.	8. Replace bus cable.
3. Panel indicators flash but RAM test (paragraph 3.7 fails.)	1. Defective RAM module.	1. Replace RAM modules.
	2. Defective 16 x 16 I/O module in slot 6.	2. Replace 16 X 16 I/O module.

4.3 CORRECTIVE MAINTENANCE

The System 4 Tester is field serviceable to the module level only. Replace any defective module detected during the running of the tests outlined in Section 3.

There are potentiometers on the Regulator module that may be used to adjust the voltages to the desired reading. If the voltage readings are not within the specified tolerances after adjusting the potentiometers, the module is defective and requires replacement.

SECTION 5

ILLUSTRATED PARTS BREAKDOWN

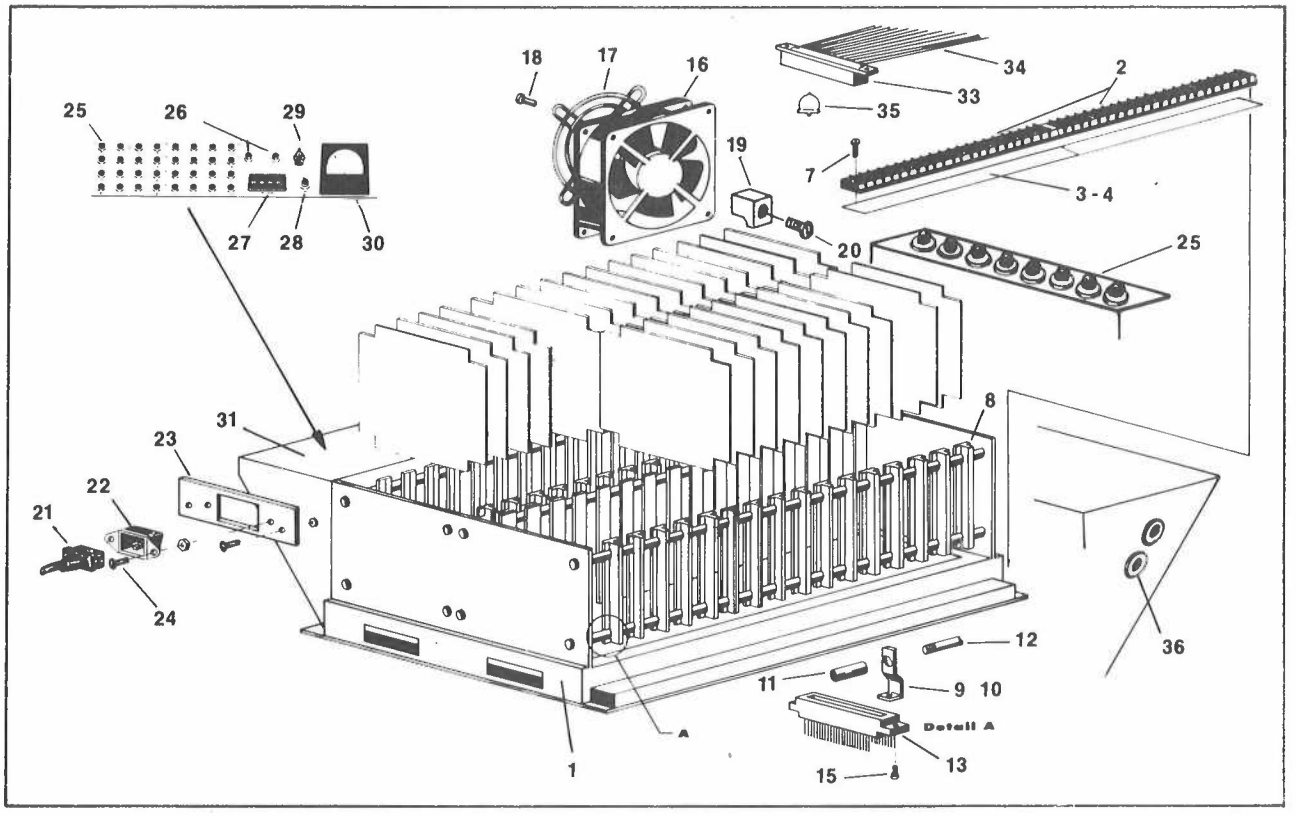

ITEM	DESCRIPTION	PART NO.	ITEM	DESCRIPTION	PART NO.
1	Chassis	9007-0401	19	Fan Mounting	9007-0700-3
2	Barrier Strip	21-40 3/4W	20	6-32 x 1/2 P.H. Machine Screw	N/A
3	Terminal Number Plate 1-21	N/A	21	AC Cord	9007-0820-1
4	Terminal Number Plate 22-42	N/A	22	AC Receptacle	9007-0820-2
5	Deleted		23	Mounting Receptacle	9007-0820-3
6	Deleted		24	6-32 x 3/8 S.C. Screw and Nut	N/A
7	6-32 x 1/2 P.H. S.T. Screw	N/A	25	Dialco Lampholder with 327 Lamp	162-8430-0931-502
8	Card Guide	9007-0500-1	26	Alco Switch	MSP 105F
9	Connector Bracket, 44 Pin	9007-0500-2	27	Cherry Thumbwheel Assembly	T20-13A4
10	Connector Bracket, 72 Pin	9007-0500-3	28	Cutler Hammer Switch	8373K27C
11	Spacer	N/A	29	Central AB Switch	1411
12	Rod	9007-0500-4	30	Simpson Meter Model 27	07370
13	Connector, 44 Pin	CP 9013-44H	31	Panel	9007-9500-1
14	Deleted		32	Deleted	
15	4-40 x 1/2 P.H. Machine Screw	N/A	33	DC Bus Connector	9007-0600-1
16	Cooling Fan	9007-0700-1	34	DC Bus Cable	9007-0600-2
17	Fan Grill	9007-0700-2	35	Connector Key	9007-0600-3
18	8-32 x 3/8 P.H. S.T. Screw	N/A	36	Banana Jack	N/A

USER RESPONSE FORM

Please use this postage-paid form to record your comments and suggestions regarding the publication listed below.

Publication No. _____

Title of Publication _____

Date _____

Name _____

Firm _____

Address _____

☐ Check here if you wish your name placed on the mailing list for future updates to this publication.

FOLD ON DOTTED LINES, STAPLE AND MAIL

FIRST CLASS
PERMIT
No. 16995
Minneapolis, Minn.

BUSINESS REPLY MAIL

NO POSTAGE NECESSARY IF MAILED IN THE UNITED STATES

Postage will be paid by

COMPUTER DIVISION

WARNER & SWASEY

7413 Washington Avenue South
Minneapolis, Minnesota 55435

Attn: Marketing Services